General lysate preparation

↓ 50 mM NaOH (600 µl for ~ 2 mm tail) (Adjust the volume of NaOH if you have a smaller tissue)
↓ Dissolved the tail at 100°C for 20-30 min
(Use cap to lock the eppendorf. Invert or shake the eppendorf sometimes)
↓ Spin at top speed for 1 min.
↓ Neutralized with 50 µl of Tris-HCl (1M, pH 8.0). Mix well (or vortex) and Spin again.
↓ put on ice and ready for used for genotyping.

From Web 1 (http://research.uci.edu/tmf/DNAprep.htm)

Final concentration of tail digestion buffer (TDB):

Chemical	Final Conc	200 ml	
KCl	50 mM	0.7455 g	
Tris-HCl (pH 9.0)	10 mM	0.3152 g	Using 1N NaOH adjust pH
Triton X-100	0.1 %	0.2 ml	

* Before use, add Proteinase K (stock 20 mg/ml) 5 µl /ml
** Proteinase K from Novagen (cat#70663-4), prepare with 50 mM Tris-HCl, pH8.0 with 1 mM $CaCl_2$.

Procedure:

↓ Add 100 µl of TDB per tail piece (2-5 mm) in a microcentrifuge tube. Be careful not to cut too much tail.
↓ Incubate the tube at either 60°C for 3 hours with gentle mixing or 55°C overnight.
↓ Incubate the tube at 95°C (or boil) for 10 minutes to denature the Proteinase K.
↓ Spin in microcentrifuge at top speed for 15 minutes. Use an aliquot of supernatant straight from the tube (e.g., 0.5 µl in a 10 µl reaction) for PCR. If the results are questionable, try a 1:20 dilution of the DNA

Genotyping for L4-CRE line (JAX no.009613);
dlx6a-CRE line (JAX no. 008199); ROR-CRE line

Primer: oIMR1084: 5'-GCGGTCTGGCAGTAAAAACTATC-3'
oIMR1085: 5 '-GTGAAACAGCATTGCTGTCACTT-3'
oIMR7338 (control): 5'- CTAGGCCACAGAATTGAAAGATCT-3'
oIMR7339 (control): 5'- GTAGGTGGAAATTCTAGCATCATCC-3'

* Primers are from Jackson Lab Web

Reaction:

	Volume (μl)
2 x Econo master mix	5
Primer-oIMR1084 (10 μM)	1
Primer-oIMR1085(10 μM)	1
Primer oIMR7338 (control)	1
Primer oIMR7339 (control)	1
Template (Genomic DNA)	1
Final	10

Use filter pipette tips when aliquoting reagents for PCR as well as when preparing master mix!

PCR program: 95°C, 5 min
95°C, 30 sec / 52°C, 40 sec / 72°C, 40 sec (35 cycles)
72°C, 5 min

Gel: 3% agarose gel (**necessary**), 135, 40 min

Results: This assay will NOT distinguish hemizygous from homozygous transgenic animals.

Expected results: Transgene = ~100 bp; internal positive control= 324 bp
and if see transgene express, the internal positive control will be weak

Genotyping of CB1 floxed/floxed

Primer: G50/CB50 : 5'-CTGTCTCTGGTCCTCTTAAA-3'
G51/CB51: 5'-GGTGTCACCTCTGAAAACAGA-3'

Reaction:

	Volume (µl)
H_2O	2
2 x Econo master mix	5
Primer-G50 (10 µM)	1
Primer-G51 (10 µM)	1
Template (Genomic DNA)	1
Final	10

Use filter pipette tips when aliquoting reagents for PCR as well as when preparing master mix!

PCR program: 95°C, 5 min
95°C, 30 sec / 58°C, 40 sec / 72°C, 40 sec (35 cycles)
72°C, 5 min

Gel: 2% agarose gel, 135 45 min

Results: CB_1 locus: +/+ : 400 bp
f/+ : 500 bp and 400 bp
f/f : 500 bp

Genotyping of CB1 knockout

Primer: CB50: 5'-GCTGTCTCTGGTCCTCTTAAA-3'
CB51: 5'-GGTGTCACCTCTGAAAACAGA-3'
CB54: 5'-CCTACCCGGTAGAATTAGCTT-3'

CB-WT primer mix: CB50 + CB51
CB-neo primer mix: CB50 + CB54

Reaction:

	Volume (μl)
H_2O	2
2 x Econo master mix	5
Primer-CB50 (10 μM)	1
Primer-CB51(for WR) or CB54 (for neo) (10 μM)	1
Template (Genomic DNA)	1
Final	10

Use filter pipette tips when aliquoting reagents for PCR as well as when preparing master mix!

PCR program: 95°C, 5 min
95°C, 30 sec / 58°C, 40 sec / 72°C, 40 sec (35 cycles)
72°C, 5 min

Gel: 2% agarose gel, 135V, 45 min

Results:
+/+ : 400 bp

Genotyping of VGAT-CRE line; RORα-CRE line; NEX-Cre line; NEX-Cre-ER line

Primer: PCR Cre484 : 5'- GCATTTCTGGGGATTGCTTA -3'
PCR Cre834: 5'-GTCATCCTTAGCGCCGTAAA -3'

Reaction:

	Volume (μl)
H_2O	2
2 x Econo master mix	5
Primer- Cre484(10 μM)	1
Primer- Cre834(10 μM)	1
Template (Genomic DNA)	1
Final	10

Use filter pipette tips when aliquoting reagents for PCR as well as when preparing master mix!

PCR program: 95°C, 5 min
95°C, 30 sec / 62°C, 30 sec / 72°C, 20 sec (35 cycles)
72°C, 5 min

Gel: 2% agarose gel, 135V, 30 min

Results: the primer were designed in the coding sequence of CRE,
the amplicon size is 351 bp

Genotyping of NEX-CRE line; NEX-CRE-ERT2 line

NEX-Cre = knock-in of Cre ORF into the NEX gene locus

Note that in the homozygous state, this effectively knocks-out NEX function

Primer:

NexForward: 5'- GAG TCC TGG AAT CAG TCT TTT TC -3'

Localized 148bp in front of the start ATG

NexReverse: 5'-AGA ATG TGG AGT AGG GTG AC-3'

Localized 622bp behind the start ATG

CreReverse: 5'-CCG CAT AAC CAG TGA AAC AG-3'

Localized 370bp behind the start ATG, within the Cre coding region

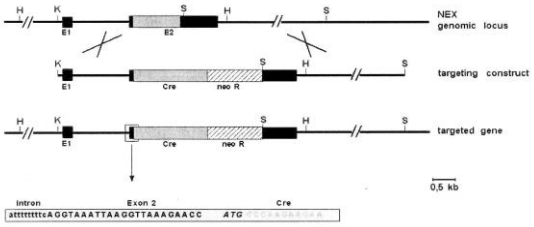

Reaction:

	Volume (µl)
H_2O	2
2 x Econo master mix	5
NEX-forward (10 µM)	1
NEX-reverse (for wild type)/ CRE-reverse (for CRE) (10 µM)	1
Template (Genomic DNA)	1
Final	10

Use filter pipette tips when aliquoting reagents for PCR as well as when preparing master mix!

PCR program: 95°C, 5 min
95°C, 30 sec / 54°C, 30 sec / 72°C, 60 sec (40 cycles)
72°C, 5 min

Gel: 1.5 % agarose gel, 135V, 40 min

Results:

Wildtype allele = 770bp product of NexForward and NexReverse primers

NEX-Cre allele = 520bp product of NexForward and CreReverse primers

Genotyping of mGluR5 flox (MGF) line

Primer: Forward Primer 153: 5'-AGATGTCCCACTTACCTGATGT-3'
Reverse Primer 154: 5'- AGTTCCGTGTCTTTATTCTTAGC-3'

Reaction:

	Volume (µl)
H_2O	2
2 x Econo master mix	5
Primer-MGF-F (10 µM)	1
Primer-MGF-R(10 µM)	1
Template (Genomic DNA)	1
Final	10

Use filter pipette tips when aliquoting reagents for PCR as well as when preparing master mix!

PCR program: 95°C, 5 min
95°C, 30 sec / 52°C, 30 sec / 72°C, 30 sec (35 cycles)
72°C, 5 min

Gel: 3% agarose gel, 135V, 40 min

Results:

Result:
wt: ~200 bp (primer 153~154)
flox: ~250 bp (primer 153~154)
deletion: ~360 bp (primer 153~316)

Genotyping of mGluR5 knockout line (JAX no. 003558)

Primer: **oIMR1034 (WT-F):** 5'- CAC ATg CCA ggT gAC ATC AT -3'
oIMR1035 (WT-R): 5'- CCA TgC Tgg TTg CAg AgT AA -3
oIMR0013 (neo-F): 5'- CTT ggg Tgg AgA ggC TAT TC -3'
oIMR0014 (neo-R): 5'- Agg TgA gAT gAC Agg AgA TC -3'

Reaction:

	Volume (μl)
H_2O	2.5
2 × Econo master mix	5
Primer-F (10 μM)	1
Primer-R(10 μM)	1
Template (Genomic DNA)	0.5
Final	10

Use filter pipette tips when aliquoting reagents for PCR as well as when preparing master mix!

PCR program: 95°C, 5 min
95°C, 30 sec / 59°C, 25 sec / 72°C, 30 sec (30 cycles)
72°C, 5 min

Gel: 1.5% agarose gel, 135V, 40 min

Results: wt band 442 bp and neo band 280 bp

Genotyping of tom/tom mice

stock number of Jackson Lab: 007909
Allele: Gt (ROSA)26Sor tm9$^{(CAG\text{-}tdTomato)Hze}$

Primer: oIMR9020 (WT-F): 5'-AAG GGA GCT GCA GTG GAG TA-3'
oIMR9021 (WT-R): 5'-CCG AAA ATC TGT GGG AAG TC-3'
oIMR9103 (Mutant-R): 5'-GGC ATT AAA GCA GCG TAT CC-3'
oIMR9105 (Mutant-F): 5'-CTG TTC CTG TAC GGC ATG G-3'

Reaction:

	Volume (μl)
H_2O	0.5
2 × Econo master mix	5
Primer-oIMR9020 (10 μM)	1
Primer-oIMR9021(10 μM)	1
Primer oIMR9103 (control)	1
P Primer oIMR9105 (control)	1
Template (Genomic DNA)	0.5
Final	10

Use filter pipette tips when aliquoting reagents for PCR as well as when preparing master mix!

PCR program: 95°C, 5 min
95°C, 30 sec / 61°C, 30 sec / 72°C, 25 sec (35 cycles)
72°C, 5 min

Gel: 2% agarose gel, 135V, 40min, should run longer to separate

Results: Mutant = 196 bp; Heterozygote = 297 bp and 196 bp; Wild Type = 297 bp

Genotyping of tau-stop-mGFP mice

Primer:

GFP-F: CGGCGAGGGCGAGGGCGATG

GFP-R: CAGGGGGCCGTCGCCGATGG

It expresses a membrane bound form of eGFP (N-terminal 40Aa of MARCKS) and is followed by an IRES-NLS-LacZ. The membrane bound version of eGFP is very good to see all details of cell surface.

Tau^{mGFP} mouse is a Cre-reporter line containing a floxed 'stop transcription' sequence in front of membrane-anchored green fluorescent protein (mGFP) and an IRES-NLS-lacZ gene inserted into exon 2 of the Tau locus (Hippenmeyer *et al.*, 2005). Cre-mediated recombination can be detected by the presence of nuclear β-galactosidase, because of the nuclear localization sequence (NLZ) engineered in the LacZ gene, and by the expression of mGFP in the axons of recombined neurons.

Hippenmeyer, S., Vrieseling, E., Sigrist, M., Portmann, T., Laengle, C., Ladle, D.R. & Arber, S. (2005) A developmental switch in the response of DRG neurons to ETS transcription factor signaling. PLoS Biol., 3, e159.

Reaction:

	Volume (μl)
H_2O	2.5
2 × Econo master mix	5
Primer-GFP-F (10 μM)	1
Primer- GFP-R (10 μM)	1
Template (Genomic DNA)	0.5
Final	10

Use filter pipette tips when aliquoting reagents for PCR as well as when preparing master mix!

PCR program: 95°C, 5 min
95°C, 30 sec / 65°C, 40 sec / 72°C, 40 sec (30 cycles)
72°C, 5 min

Gel: 1.5% agarose gel, 135V, 40 min

Results: 500 bp transgene; no band is wild type

RORα-Cre mice were generated by inserting an *IRES-cre* cDNA fragment into the 3′ noncoding region of the RORα gene in Dr Dennis O'Leary's laboratory (data not shown). Cre expression in RORα-Cre mice is similar to endogenous *RORα* expression (Nakagawa & O'Leary, 2003).

Nakagawa, Y. & O'Leary, D.D. (2003) Dynamic patterned expression of orphan nuclear receptor genes RORalpha and RORbeta in developing mouse forebrain. Dev. Neurosci., 25, 234–244.

Genotyping of NMNAT2 mice

Primer:

The integration site is on chr1G3 and is linked to the right IR/DR of the transposon beginning at 154,851,334(+)

R3 primer (from the right IR/DR): 5' - CCACTGGGA ATG TGA TGA AAG AAA TAA AAG C -3' (ove2172Chr1G3)

RF (right flank) primer. This primer is antisense and is downstream from the integration site 5' -CTG ACG TCT ATC TAG AAG TAC AC -3' (chr1G3:154,851,749-154,851,771(-))

ove2172Chr1G3 **upstream primer (sense)**

5'- GGA AAA GCC CAA ATCCCA GCA A -3' (chr1G3:154,850,990-154,851,011(+))

Reaction

	Volume (μl)
H_2O	2
2 x Econo master mix	5
RF (10 μM)	1
R3 or UP (10 μM)	1
Template (Genomic DNA)	1
Final	10

Use filter pipette tips when aliquoting reagents for PCR as well as when preparing master mix!

PCR program: 95°C, 5 min
95°C, 30 sec / 60°C, 40 sec / 72°C, 40 sec (35 cycles)
72°C, 5 min

Gel: 2 % agarose gel, 135V, 40h

Results:

R3 + RF: 630 bp band if the mouse is transgenic; no band for a non-transgenic mouse.

RF + upstream primer: 760 bp band if the mouse is wild type or heterozygous; no band if the mouse is homozygous.

Male-specific Sry (Sex determining region protein gene) gene

Primer:

Sry-F (Forward locus 8276-8295): 5'- TGGGACTGGTGACAATTGTC -3'
Sry-R (Reverse locus 8677-8658): 5'- GAGTACAGGTGTGCAGCTCT -3'

***from Journal of Neuroscience Methods 95 (2000), 127-132. Quick sex determination of mouse fetuses**

Reaction: use Econo 2x mater mix

	Volume (μl)
H_2O	2.5
2 × master mix	5
Sry-F (10 μM)	1
Sry-R (10 μM)	1
Template (Genomic DNA)	0.5
Final	10

Use filter pipette tips when aliquoting reagents for PCR as well as when preparing master mix!

PCR program: 95°C, 5 min
95°C, 30 sec / 57°C, 40 sec / 72°C, 40 sec (35 cycles)
72°C, 5 min

Gel: 2 % agarose gel, 135V, 40h

Results: 402 bp representing the Y-specific Sry gene

Genotyping of FGF9 conditional KO mice

Mouse is from Fen Wang (MGI ID: 3621452)

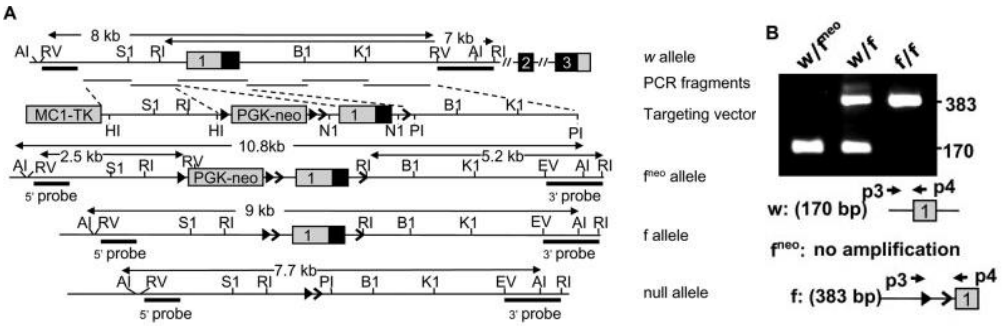

Primer:

FGF9-P3 (Forward): AGA GAA ACT GCC CTG TCC AAC CAA

FGF9-P4 (Reverse) : CAG CCC GAA GAC ATT CGG CCA CAA

Reaction

	Volume (μl)
H_2O	2.5
Econo 2x mater mix	5
Primer- F (10 μM)	1
Primer- R(10 μM)	1
Template (Genomic DNA)	0.5
Final	10

Use filter pipette tips when aliquoting reagents for PCR as well as when preparing master mix!

PCR program: 95°C, 5 min
95°C, 30 sec / 60°C, 30 sec / 72°C, 30 sec (34 cycles)
72°C, 5 min

Gel: 2 % agarose gel, 135V, 30 min

Results: WT allel 170 bp; flox allel 383bp

Protocol-Genotyping
Jessica Felker/Dr. Hui-Chen Lu's Lab

Genotyping of FGFR2 conditional KO mice

Original paper Development, 2003, 130, 3063-3074

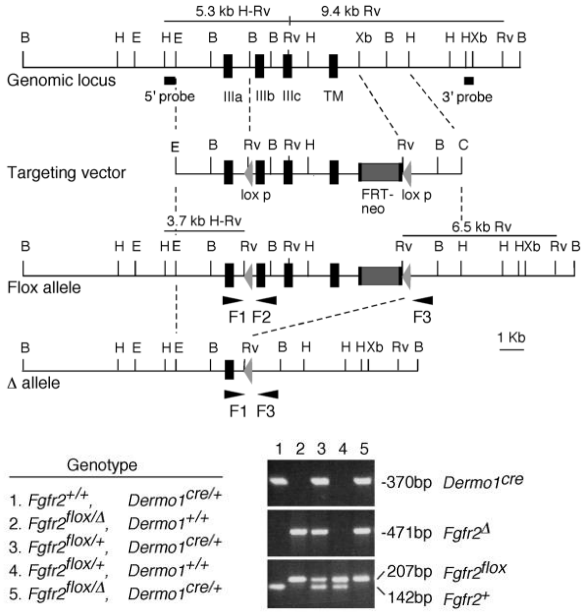

Primer:

FGFR2-F1 (Forward): ATAGGAGCAACAGGCGG

FGFR2-R1 (Reverse) : TGCAAGAGGCGACCAGTCAG

Reaction

	Volume (μl)
H_2O	2.5
Econo 2x mater mix	5
Primer- F (10 μM)	1
Primer- R(10 μM)	1
Template (Genomic DNA)	0.5
Final	10

Use filter pipette tips when aliquoting reagents for PCR as well as when preparing master mix!

PCR program: 95°C, 5 min
95°C, 30 sec / 60°C, 30 sec / 72°C, 30 sec (34 cycles)
72°C, 5 min

** the same program as FGF9*

Gel: 2 % agarose gel, 135V, 30 min

Results: WT allel 142 bp; flox allel 207 bp

Genotyping of Ntrk1 mice (JAX no. 022362)

These mice carry a hypomorphic floxed F592A mutation in mouse *Ntrk1* (neurotrophic tyrosine kinase, receptor, type 1; also called TrkA). Signaling is effectively blocked by application of 1NMPP1. This strain is useful in studies of nerve growth and survival.

Original paper: Neurons, 2005, Volume 46, Issue 1, pages 13-21.
A Chemical-Genetic Approach to Studying Neurotrophin Signaling

Primer:
Ntrk1-F (16834): 5'-CAC AGG GGC TGG AAA CAG T-3'
Ntrk1-R (16835): 5'-TCT ATG TGT GAG GTA TGT GCA TC-3'

Reaction

	Volume (μl)
H_2O	2.5
Econo 2x mater mix	5
Ntrk1- F (10 μM)	1
Ntrk1- R(10 μM)	1
Template (Genomic DNA)	0.5
Final	10

Use filter pipette tips when aliquoting reagents for PCR as well as when preparing master mix!

PCR program: 95°C, 5 min
95°C, 30 sec / 60°C, 30 sec / 72°C, 35 sec (30 cycles)
72°C, 5 min

Gel: 2 % agarose gel, 135V, 30 min

Results: WT allel 472 bp; mutant allel ~600 bp

Genotyping of FGFR1 conditional KO mice

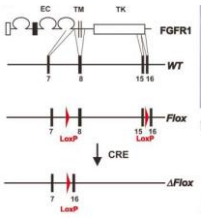

Original paper: FGFR 1 is independently required in both developing mid-and hindbrain for sustained response to isthmic signals. The EMBO Journal, 2003, Vol. 22, 1811-1823.

Primer:

FGFR1-F: 5'- agggtcatcgaatggacaag -3'

FGFR1-R: 5'- atcctcctgcttccttcaga -3'

Reaction

	Volume (μl)
H_2O	2.5
Econo 2x mater mix	5
FGFR1- F (10 μM)	1
FGFR1- R(10 μM)	1
Template (Genomic DNA)	0.5
Final	10

Use filter pipette tips when aliquoting reagents for PCR as well as when preparing master mix!

PCR program: 95°C, 5 min
95°C, 30 sec / 60°C, 30 sec / 72°C, 30 sec (34 cycles)
72°C, 5 min

** the same program as FGF9*

Gel: 2 % agarose gel, 135V, 30 min

Results: WT allel 200 bp; mutant allel 400 bp

Genotyping of FGFR3 conditional KO mice

Original paper: Generation of Fgfr3 Conditional Knockout Mice. International Journal of Biological Sciences, 2010, 6(4):327-332.

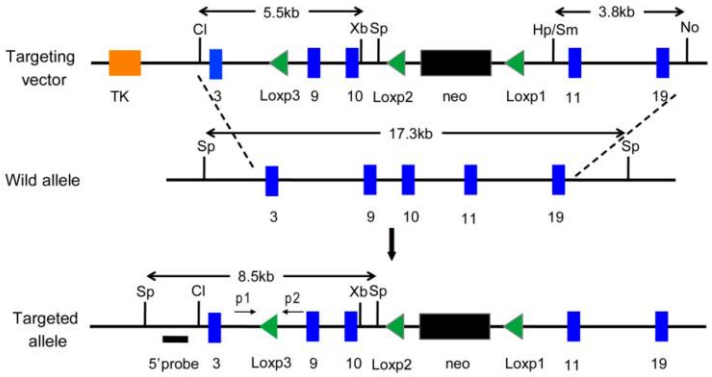

Primer:

FGFR3-F: 5'- tgtaaaggggtggggtggtag -3'

FGFR3-R: 5'- gctccctgtcctgcctcgtg-3'

Reaction

	Volume (μl)
H_2O	2.5
Econo 2x mater mix	5
FGFR3- F (10 μM)	1
FGFR3- R(10 μM)	1
Template (Genomic DNA)	0.5
Final	10

Use filter pipette tips when aliquoting reagents for PCR as well as when preparing master mix!

PCR program: 95°C, 5 min
95°C, 30 sec / 60°C, 30 sec / 72°C, 30 sec (34 cycles)
72°C, 5 min

** the same program as FGF9*

Gel: 2 % agarose gel, 135V, 30 min

Results: WT allel 260 bp; mutant allel 320 bp

Genotyping of FGFR3-TDII (FGFR3 conditional) overexpression mice

Fgfr30with the K644E mutation, reflects the embryonic onset of neonatal lethal dwarfism, thanatophoric dysplasia type II (TDII)

Original paper: Human Molecular Genetics, 2000, Vol. 9, No. 11, 1603-1613
A neonatal lethal mutation in FGFR3 uncouples proliferation and differentiation of growth plate chondrocytes in embryos

Primer:
FGFR3-TDII-F: 5'- cgtggagttccactgcaag -3'
FGFR3-TDII -R: 5'- caccagccacgcagagtgatg -3'

Reaction

	Volume (μl)
H_2O	2.5
Econo 2x mater mix	5
FGFR3- F (10 μM)	1
FGFR3- R(10 μM)	1
Template (Genomic DNA)	0.5
Final	10

Use filter pipette tips when aliquoting reagents for PCR as well as when preparing master mix!

PCR program: 95°C, 5 min
95°C, 30 sec / 58°C, 30 sec / 72°C, 25 sec (34 cycles)
72°C, 5 min

Gel: 2 % agarose gel, 135V, 30 min

Results: mutant allel 250 bp

Genotyping of GAD67-GFP Knock-In mice

Original paper: The Journal of Comparative Neurology, 2003, 467, 60-79.
Green Fluorescent Protein Expression and colocalization with calretinin, parvalbumin, and somatostatin in the GAD67-GFP Knock-in mouse

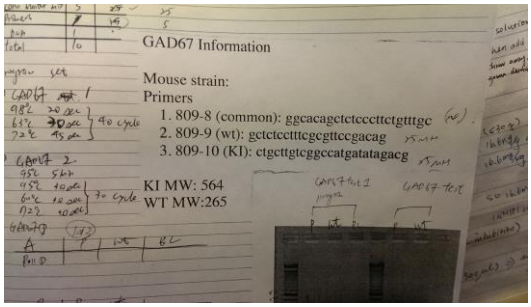

Primer:

GAD67-common (809-8): 5'-ggcacagctctcccttctgtttgc -3'
GAD67-WT (809-9): 5'-gctctcctttcgcgttccgacag -3'
GAD67-KI (809-10): 5'-ctgcttgtcggccatgatatagacg-3'

Reaction

	Volume (μl)
H_2O	1.5
Econo 2x mater mix	5
GAD67-common (10 μM)	1
GAD67-WT (10 μM)	1
GAD67-KI (10 μM)	1
Template (Genomic DNA)	0.5
Final	10

Use filter pipette tips when aliquoting reagents for PCR as well as when preparing master mix!

PCR program: 95°C, 5 min
95°C, 30 sec / 60°C, 30 sec / 72°C, 25 sec (35 cycles)
72°C, 5 min

Gel: 2 % agarose gel, 135V, 30 min

Results: WT 265 bp; KI 564 bp

Genotyping of GPR55

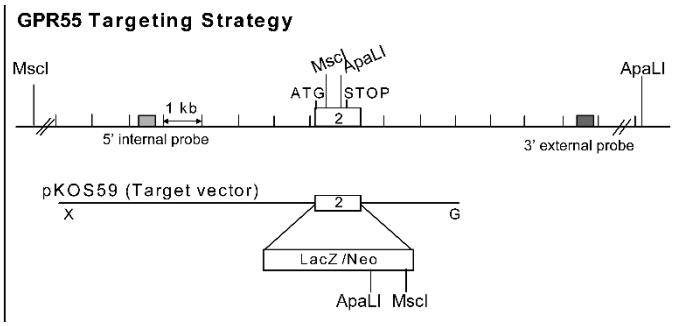

Wu, C.-S., Zhu, J., Wager-Miller, J., Wang, S., O'Leary, D., Monory, K., … Lu, H.-C. (2010). Requirement of cannabinoid CB_1 receptor in cortical pyramidal neurons for appropriate development of corticothalamic and thalamocortical projections. *The European Journal of Neuroscience*, *32*(5), 693–706. http://doi.org/10.1111/j.1460-9568.2010.07337.x

Primer: GPR55-WT-F: 5'-GCCATCCAGTACCCGATCC-3'

GPR55-WT-R: 5'-GTCCAAGATAAAGCGGTTCC-3'

GPR55-Neo-F: 5'-GCAGCGCATCGCCTTCTATC-3'

GPR55-Neo-R: 5'-TCAAGCTACGTTTTGGGTT-3'

Reactions:

GPR55-WT primer mix: GPR55-WT-F and GRP55-WT-R

GPR55-neo primer mix: GPR55-Neo-F and GPR55-Neo-R

Reaction:

	Volume (μl)
H_2O	2
2X Econo Master Mix	5
Primer-F (10 μM)	1
Primer-R (10 μM)	1
Template (Genomic DNA)	1
Final	10

Use filter pipette tips when aliquoting reagents for PCR as well as when preparing master mix!

PCR program: 95°C, 5 min

95°C, 30 sec / 58°C, 30 sec / 72°C, 25 sec (35 cycles)

72°C, 5 min

Gel: 2% agarose gel, 135V, 30 min

Results: WT- 441 bp and Neo- 301 bp

Genotyping of Cx3cr1

Primer: 12266 common: 5'-AAGACTCACGTGGACCTGCT-3'

14314 Mutant Reverse: 5'-CGGTTATTCAACTTGCACCA-3'

16221 Wild Type Reverse: 5'-AGGATGTTGACTTCCGAGTTG-3'

Reaction:

	Volume (μl)
H_2O	1
2X Econo Master Mix	5
12266 common (10 μM)	1
14314 mutant reverse (10 μM)	1
16221 wild type reverse (10 μM)	1
Template (Genomic DNA)	1
Final	10

Use filter pipette tips when aliquoting reagents for PCR as well as when preparing master mix!

PCR program:

Cycling

Step #	Temp °C	Time	Note
1	94	2 min	-
2	94	20sec	-
3	65	15sec	-0.5 C per cycle
4	68	10sec	-
5	-	-	repeat steps 2-4 for 10 cycles
6	94	15sec	-
7	60	15sec	-
8	72	10sec	-
9	-	-	repeat steps 6-8 for 28 cycles
10	72	2 min	-
11	10	-	hold

Gel: 2% agarose gel, 135V, 30 min

Results:

Mutant: ~300 bp

Heterozygous: ~300 bp and 695 bp

Wild type: 65 bp